4 Channel MR-16 PowerPSoC Board

Sr	Revision	Date	Designer	Description
01	01	25-JUNE-08	VAISHNAVI TAMIMUN ANSARI	INITIAL CREATION
02	01	02-JULY-08	VAISHNAVI TAMIMUN ANSARI	BLOCK DIAGRAM ADDED CURRENT SENSE RESISTORS VALUE CHANGED FROM 0.1 TO 0.22 OHM
03	01	03-JULY-08	VAISHNAVI TAMIMUN ANSARI	REGULATOR SECTION ADDED
04	01	10-JULY-08	VAISHNAVI TAMIMUN ANSARI	OCD Connector Section Added and L1,L2,L3 & L4 inductor Footprint changed
06	01	10-JULY-08	VAISHNAVI TAMIMUN ANSARI	D3,D5,D6 & D7 Schottky Diodes Series is changed
07	02	06-JUNE-09	SRINIVAS VINOD	Changed all title blocks, removed OCD section, removed BSR section, removed R4, J1, J7, J8, J9, J10, D8, D9, D10, D11 pulled up BSR pins to VCC_5, added J11, J12, J13, changed net name ocd_issp_xres to issp_xres
08	02	11-JUNE-09	SRINIVAS VINOD	Updated pins 7,8,25,53 and 56 of U2 as NC. Updated the Reference designators of J11 as J1,J12 as J3 and J13 as J4. Value of R13 updated as 100 ohms. D1 updated as No-Load. Removed the 8X1 Hole J4 and Added the single pin hole A1,K1,A2,K2,A3,K3,A4 and K4. Added the 0.1ufCaps C29,C31,C32,C33 and C34 and mad as NO-LOAD
09	02	29-JUNE-09	SRINIVAS VINOD	Added jumper holes to pin 1,6,7,8 of U2. Remove the components C9,R11,LED1,VCC_5 and also removed FB1,FB2. Replaced J1 by 4 Jumper holes. Added a jumper hole to VCC_5 net on page 4
10	02	08-JULY-09	SRINIVAS VINOD	Connected pin 18, 29, 44 of U2 to VCC_5 net. Removed R7. Changed VCC_EREG to VCC_5. Removed SP1. Updated all grounds as one net, GND. Changed values of R14, R16, R20, R24 to 0.15 ohms, 1206, 1%. Removed C17, C15, C28, C25. Changed C19, C27, C24, C21 to 2.2uF,25V, 0805, X7R capacitor. Removed the switching circuit SW1 section. Removed J5 and R6. Connected <di> net from page 5 directly to pin 4 of U5. Removed R1 and R19. Remove R28 and R29. Added resistive divider circuit to pin 45 of U2. Added the J1 connector and made as No-Load
11	02	13-JULY-09	SRINIVAS VINOD	Updated the Block Diagram. Changed the text to "Input Power Supply 7V-24V DC" in the schematic page 4. Updated the Fuse Part no to 1A as 0154001.DRT Changes C1 to 0.1uF_16V Connected common node R4 and R6 to pin 45 and pin 53 of U2.
12	02	14-AUG-09	SRINIVAS VINOD	-Updated the value of C19, C21, C24 and C27 to 3.3uF, 1206, 25V. -Updated the value of C14, C16 to 1uF, 0805, 16V. -Updated the value of R4 to 16.2K -Updated the value of R6 to 3.01K.

DRN BY	SNVN	CYPRESS SEMICONDUCTOR 198 Champion Court San Jose, CA 95134-1709	
DATE			
CHKD BY	06/29/2009	Title: 4 Channel MR-16 PowerPSoC Board	
DATE			
APPD BY		Size: C	Document Number: COVER PAGE — Rev: 2.0
DATE		Date: Monday, November 09, 2009	Sheet 1 of 7

PROPRIETARY INFORMATION
NO DISSEMINATION OR USE ALLOWED WITHOUT PRIOR WRITTEN PERMISSION

PAGE NO	TITLE
01	COVER PAGE
02	TITLE BLOCK
03	BLOCK DIAGRAM
04	INPUT POWER SUPPLY
05	CY8CLED04D01 - PowerPSoC
06	RS-485 TRANSCEIVER CIRCUIT AND ISSP CONNECTOR
07	MANUFACTURING POINTS

CYPRESS SEMICONDUCTOR

Title: 4 Channel MR-16 PowerPSoC Board

Size: A | Document Number: Title Page | Rev: 2.0

Date: Monday, November 09, 2009 | Sheet 2 of 7

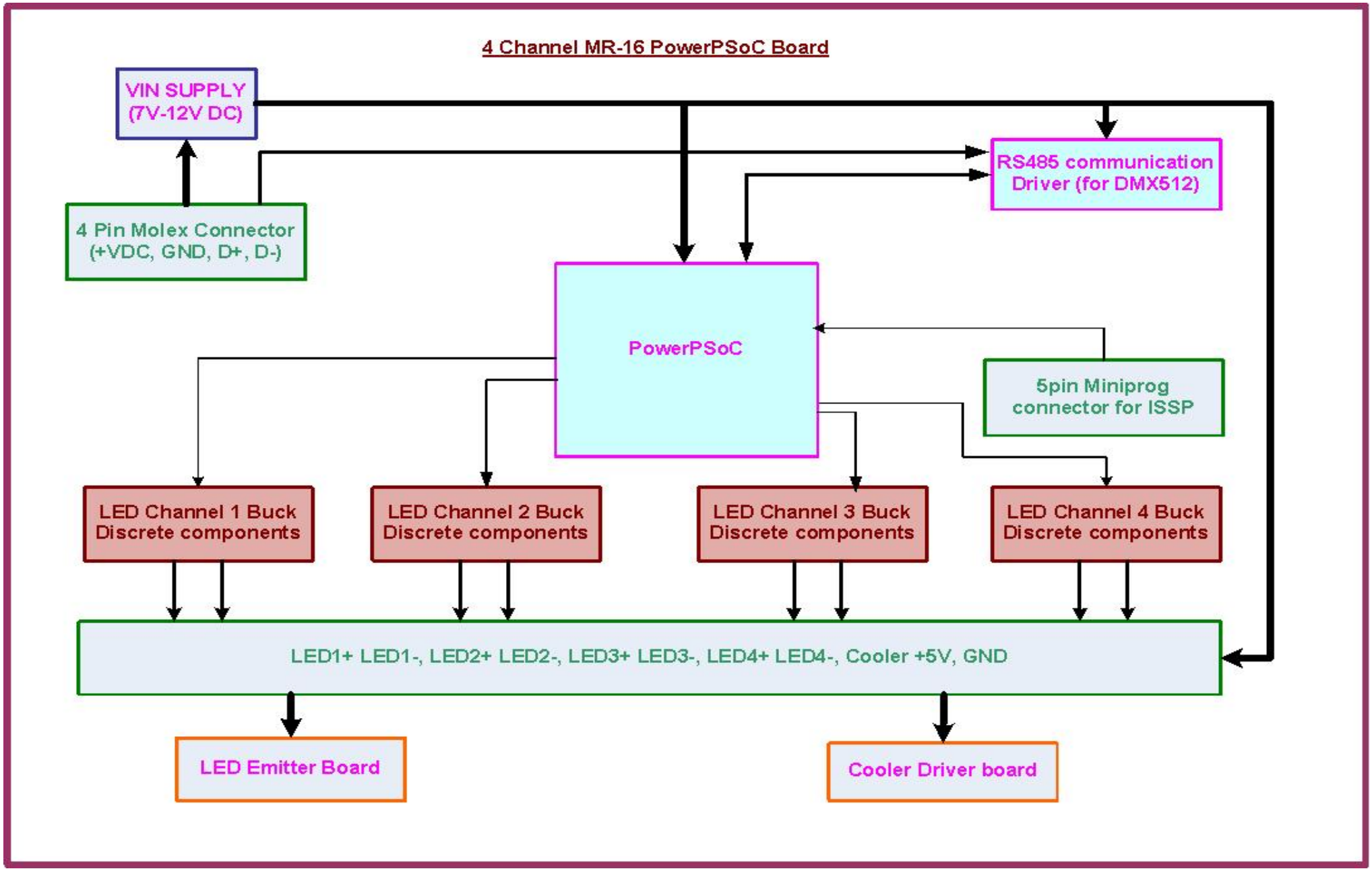

CYPRESS SEMICONDUCTOR		
Title: 4 Channel MR-16 PowerPSoC Board		
Size: A	Document Number: BLOCK DIAGRAM	Rev: 2.0
Date: Monday, November 09, 2009	Sheet 3 of 7	

POWER SUPPLY

INPUT POWER SUPPLY: 7V-12V DC

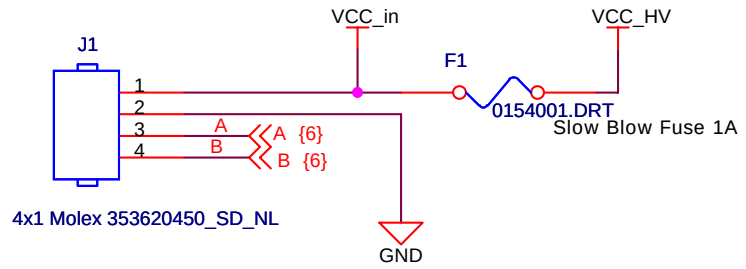

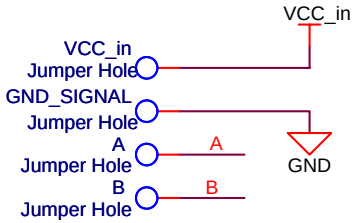

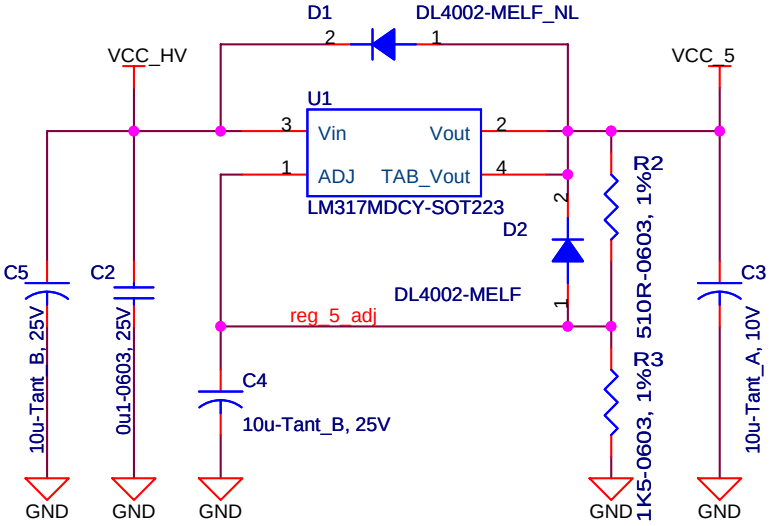

External Regulator for generating +5V, 500mA



CYPRESS SEMICONDUCTOR		
Title: 4 Channel MR-16 PowerPSoC Board		
Size: A	Document Number: POWER SUPPLY	Rev: 2.0
Date: Monday, November 09, 2009	Sheet 4 of 7	

CY8CLED04D01- PowerPSoC

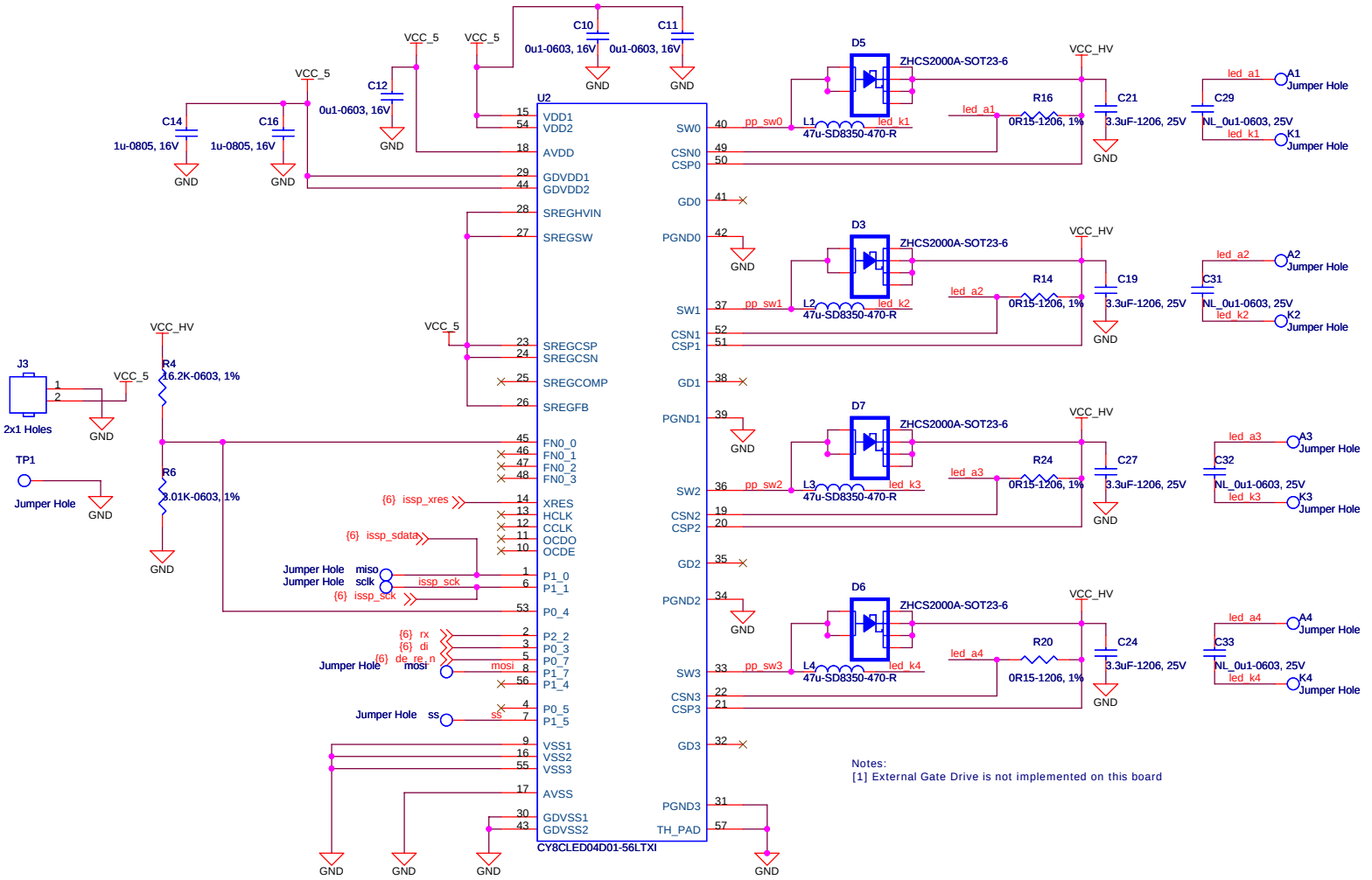

Notes:
[1] External Gate Drive is not implemented on this board

CYPRESS SEMICONDUCTOR

Title: 4 Channel MR-16 PowerPSoC Board		
Size: B	Document Number: CY8CLED04D01-PowerPSoC	Rev: 2.0
Date: Monday, November 09, 2009	Sheet 5 of 7	

RS-485 TRANSCEIVER CIRCUIT AND ISSP CONNECTOR

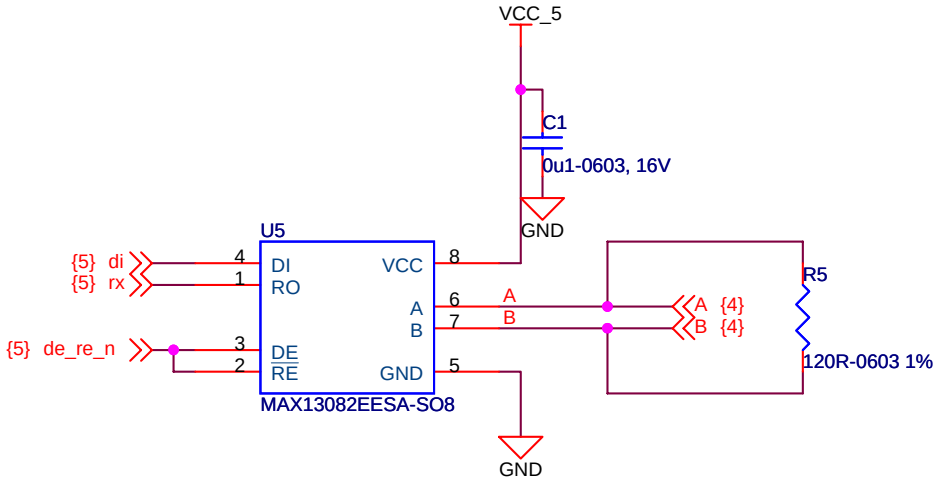

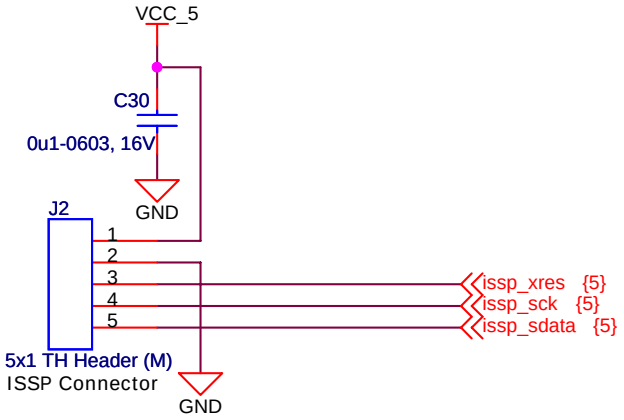

Put ISSP Connector as close as possible to PowerPSoC chip

CYPRESS SEMICONDUCTOR		
Title: 4 Channel MR-16 PowerPSoC Board		
Size: A	Document Number: RS-485 TRANSCEIVER CIRCUIT AND CONNECTORS	Rev: 2.0
Date: Monday, November 09, 2009	Sheet 6 of 7	

MANUFACTURING POINTS

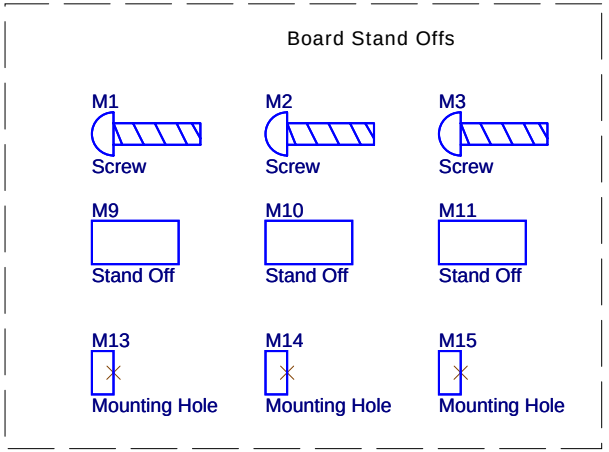

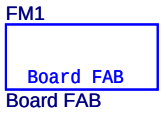

CYPRESS SEMICONDUCTOR		
Title: 4 Channel MR-16 PowerPSoC Board		
Size: A	Document Number: MANUFACTURING POINTS	Rev: 2.0
Date: Monday, November 09, 2009	Sheet 7 of 7	